Isodesign®

DOKONALÁ ŽALUZIE

PRO OKNA S IZOLAČNÍM DVOJSKLEM

systra®

www.systra.cz

systra®

Isodesign®

Product Systra no. 24

Maximum width 220 cm, maximum height 250 cm, maximum area cca 2,5 m^2.
The width is defined by the slat length, the height is defined as the clearance between the head and bottom frame of the leaf.

L-shaped head rail with outside dimensions 25 x 45 mm,
two-piece bottom rail 19 x 10 mm,
slats **25 mm** wide with thickness 0,18 to 0,215 mm.

Material: head and bottom rails of steel plate, varnished with coil coating on both sides, slats of Al-Mg-alloy, polyfunctional basic part of the control and accessories from plastic.

Colour: rails, housings and accessories white, brown, ochre or silver (grey), slats acc. to the current offer.

Control: lifting and tilting of slats by the ball chain. Side fixation (guiding) by monofilament strings.

Fixing: screwing of the basic parts in the leaf frame or in the glazing slats.

Bunch height of the lifted blind (mm)

	blind height (mm)				
	500	1000	1500	2000	2500
bunch height	45	60	70	85	100

ATTENTION!
Perforated slats are not suitable for this product type.
The textile tape could be damaged.

PLASTIC WINDOW

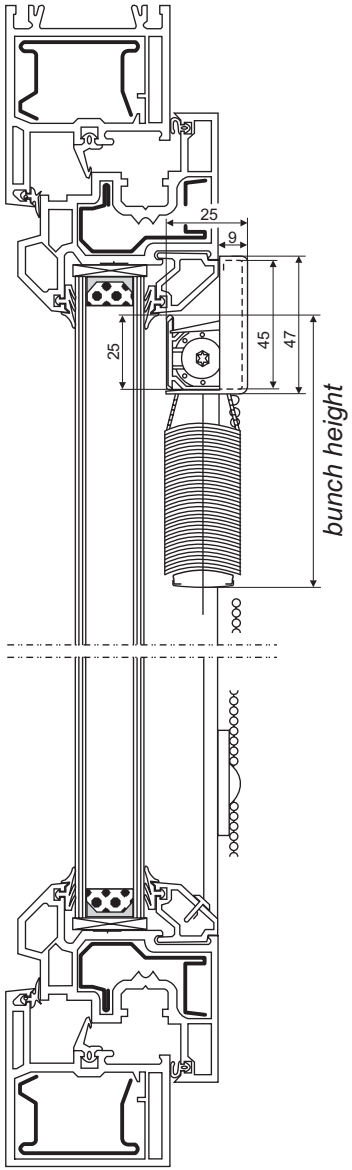

WOODEN WINDOW

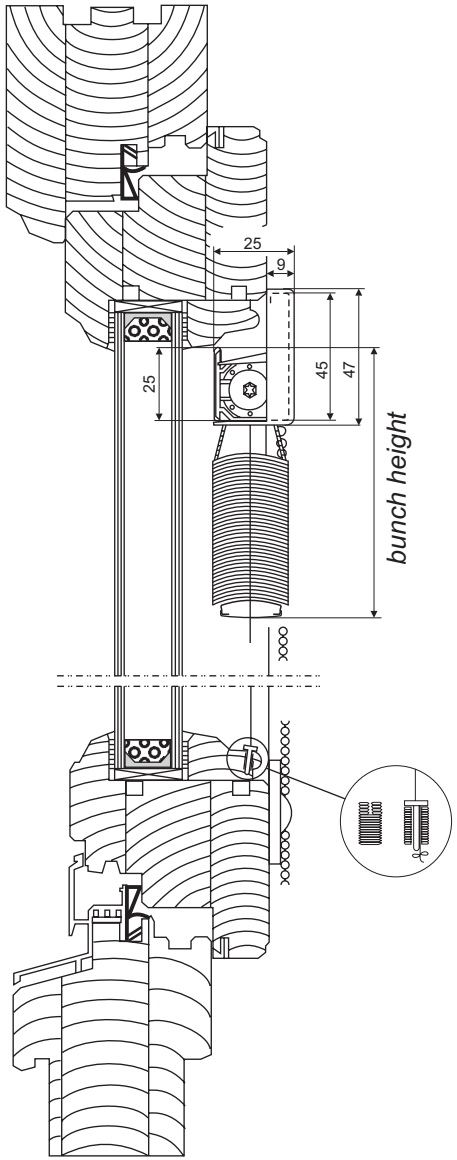

systra®

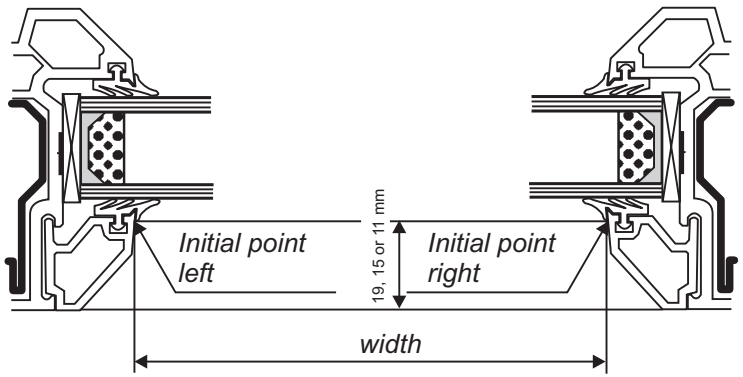

Measuring method

The initial point is 19,15 or 11 mm from the intrados of the window frame (acc. to the number of distance pieces), from the width is deducted 2 x 2,5 mm, the height is a full dimension.

Double glazing
without distance pieces
depth min. 19 mm

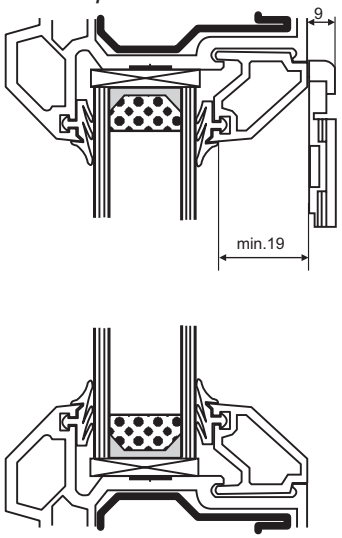

Double glazing + bar
1 distance piece
min. 15 mm difference
bar x outside edge of the glazing slat

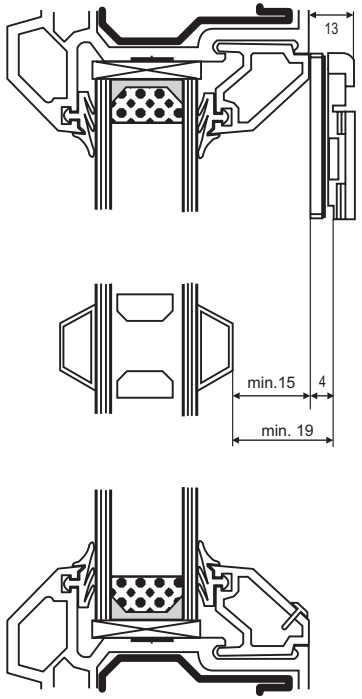

Triple glazing
1 distance piece
depth min. 15 mm

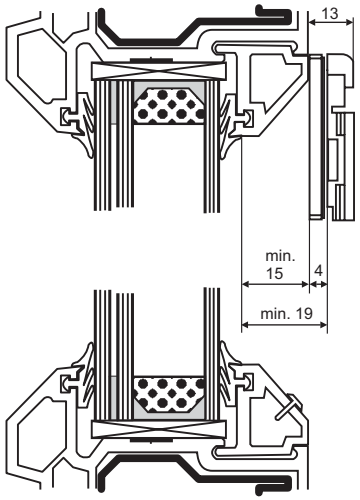

Triple glazing
2 pairs of distance pieces
glazing depth min. 11 mm

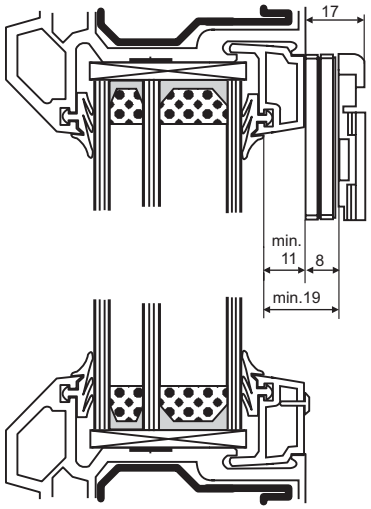

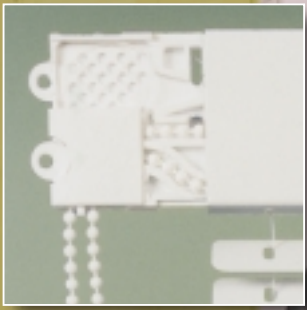

Kloubová ramena s ocelovými lanky a pružinovým ■ Joint arms with double wire and steel springs to guarantee ■ Gelenkarme mit Doppelseilen und Stahlfedern sorgen

Kazetová markýza s volánem ■ Box awning with flounce ■ Kasettenmarkise mit Volant

Nerezová markýza s protitahem pro instalaci v šikmé nebo vodorovné poloze ■ Awning of noble steel with countermove for the placing in oblique or horizontal position ■ Edelstahlmarkise mit Gegenzug für Montage in schräge bzw. waagerechte Lage

Markýzoleta ■ Markisolette ■ Markisolette

© ATTIS, spol. s r.o.